Safety Laser Scanner Type 3
SD3-A1

Related Information ■ General terms and conditions..... F-17 ■ General precautions P.1405

Category 3 PLd SIL2

panasonic-electric-works.net/sunx

Conforming to Machine & EMC Directive

Certified

FDA Conforming to FDA regulations

This product is classified as a Class 1 Laser Product in IEC / JIS standards and in FDA regulations (21 CFR 1040.10 and 1040.11). Do not look at the laser beam through optical system such as a lens.

Monitor dangerous areas for unauthorized entry using flexible detection zones!

OPERATING PRINCIPLE

The safety laser scanner is used as an interlock that checks the reflection of the emitted laser and permits machine operation only when a person or an object is not present. Because it performs monitoring using invisible light, it is effective in wide areas that could not be enclosed by a safety fence or locations that become less efficient for work when they are concealed by a door or cover.

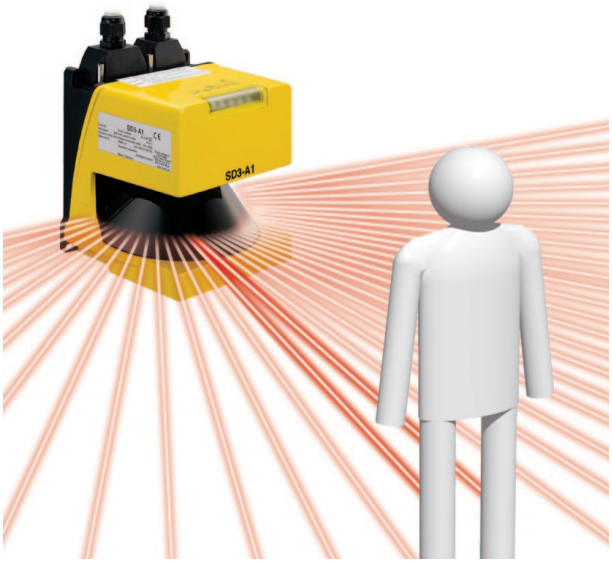

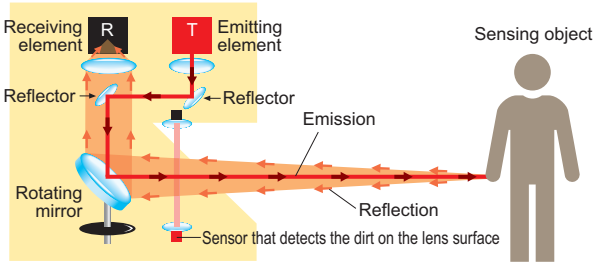

A pulsed laser beam is discharged from the emitting element (T) to the reflectors and onto a rotating mirror. The rotating mirror scans the laser as it rotates. The diffuse reflection from the sensing object is then returned to the receiving element (R) by means of the rotating mirror. The location of the sensing object is measured based on the travel time of the laser and the angular information of the rotating mirror. The monitoring area of max. 190° is divided into 528 segments (each 0.36°) by the rotating mirror.

APPLICATIONS

Detecting entry into dangerous areas at processing machines
Warning and machine halt zones are implemented to detect workers in dangerous areas.

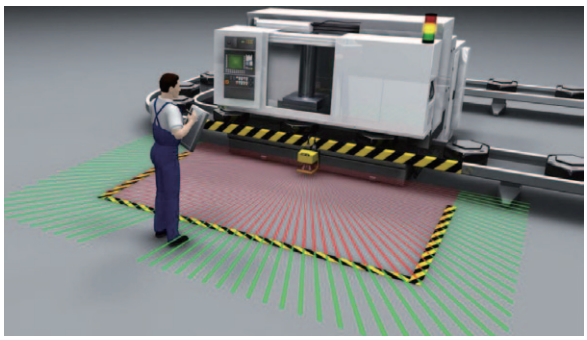

Confirming safety around automatic guided vehicles
The scanner is used to slow down the speed of the vehicle upon detection at the warning zone and stop the vehicle upon entering the detection zone.

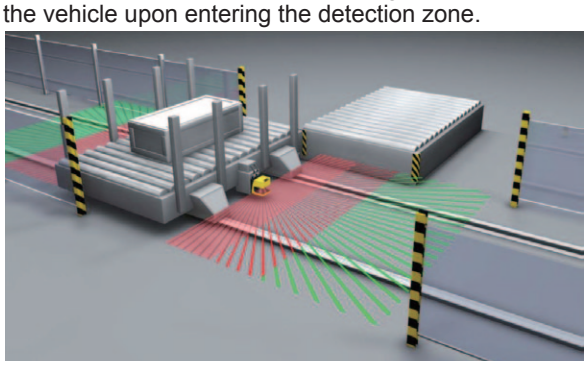

Detecting presence in a defined field
Install two safety laser scanners to build a detection zone that surrounds the monitoring object. Deactivation of detection is also possible by the flexible zone configuration.

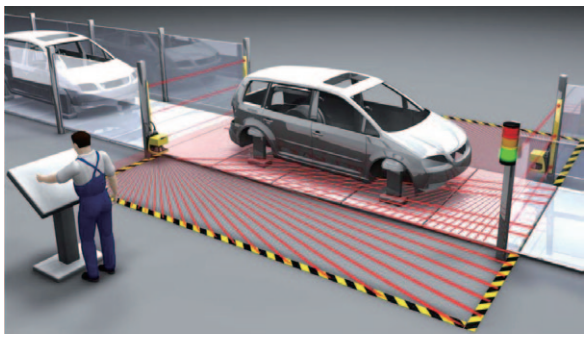

Detecting entry into dangerous areas of circular cycle tables
One safety laser scanner can safeguard the front opening, where in the past two sets of light curtains were needed.

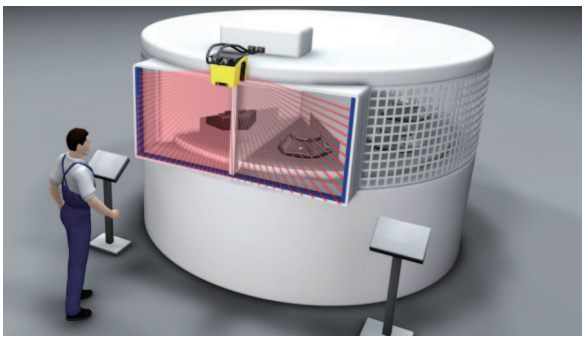

Freely configurable zones

Two zones can be widely monitored with the **SD3-A1**, the warning zone (within a radius 15 m 49.213 ft) and the detection zone (protection zone) (within a radius 4 m 13.123 ft). The contours of these zones are fully configurable for a perfect fit in every application. Up to eight zone patterns can be set and switched over at any given time, even during operation.

Flexible zone configuration by PC

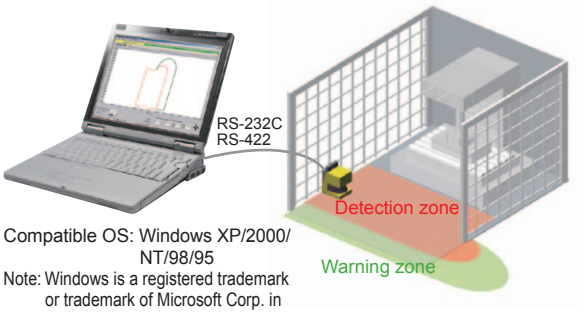

Compatible OS: Windows XP/2000/NT/98/95
Note: Windows is a registered trademark or trademark of Microsoft Corp. in the U.S. and/or other countries.

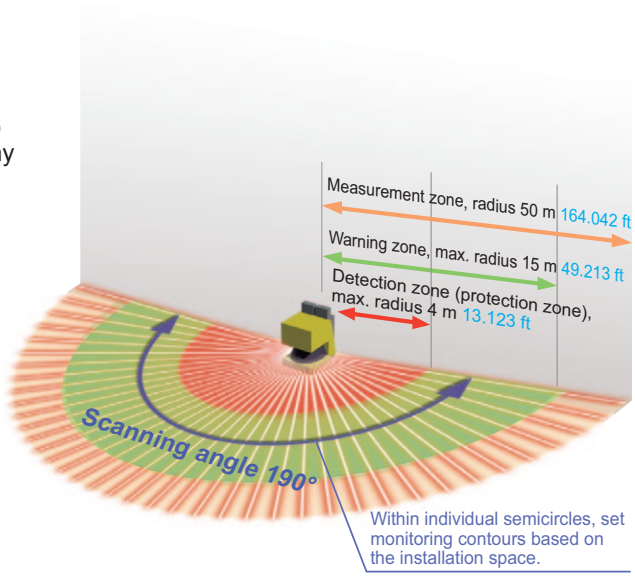

Detection zone: Instantly stops the machine upon intrusion (control output)
Warning zone: Releases warning upon intrusion (warning output)

Up to 8 freely switchable zone patterns

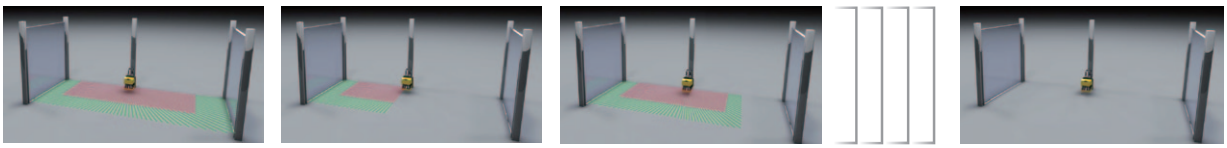

Zone No.1 (example) | Zone No.2 (example) | Zone No.3 (example) • • • No.7 | Zone No.8 (fixed) Detection deactivated

FIBER SENSORS
LASER SENSORS
PHOTOELECTRIC SENSORS
MICRO PHOTOELECTRIC SENSORS
AREA SENSORS
LIGHT CURTAINS
PRESSURE / FLOW SENSORS
INDUCTIVE PROXIMITY SENSORS
PARTICULAR USE SENSORS
SENSOR OPTIONS
SIMPLE WIRE-SAVING UNITS
WIRE-SAVING SYSTEMS
MEASUREMENT SENSORS
STATIC CONTROL DEVICES
ENDOSCOPE
LASER MARKERS
PLC / TERMINALS
HUMAN MACHINE INTERFACES
ENERGY CONSUMPTION VISUALIZATION COMPONENTS
FA COMPONENTS
MACHINE VISION SYSTEMS
UV CURING SYSTEMS

Compact size

Compact size of W140 × H195 × D135 mm
W5.512 × H7.677 × D5.315 in

Monitors beam misalignment after installation of safety laser scanner

By activating the reference boundary function which enables constant detection of stationary objects, the safety laser scanner memorizes the position of stationary objects, and monitors for beam misalignment after installation.

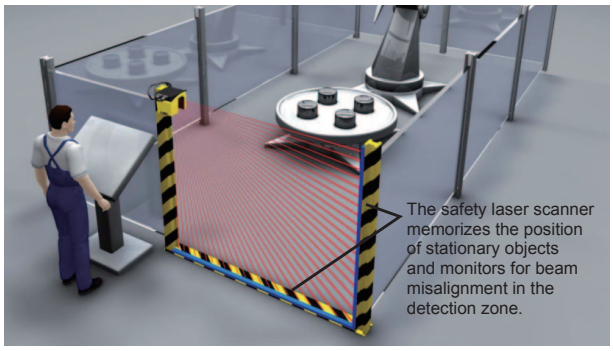

Prevents malfunctions caused by insects and dust

The safety laser scanner eliminates small insects and dust through it unique algorithm, "dust suppression function".

Adjustment of response times enables interference prevention

The response time is adjustable within the range from 80 to 640 ms. When setting up multiple safety laser scanners in close vicinity, mutual interference can be prevented by adjusting the response time.

Memorized configurations make post-maintenance recovery easy (Optional)

Configurations can be saved in the optional configuration plug which has a built-in memory. Even after maintenance or interchanging of safety laser scanners, the configurations from the memory in the plug can be easily loaded and recovered without the need to configure through a PC.

Selection Guide
Laser Scanner
Single Beam Sensor
Light Curtains
Control Units
Optical Touch Switch
Definition of Sensing Heights
SD3-A1

ORDER GUIDE

Designation	Appearance	Model No.	Control outputs (OSSD 1, OSSD 2)
Safety laser scanner	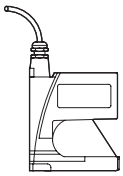	**SD3-A1**	PNP open-collector transistor 2 outputs

Spare parts (Accessories for safety laser scanner)

Designation	Model No.	Description
Straight connector for 15-pin connector side	**SD3-PS**	Exclusive 15-pin connector. Straight type. For soldering. Net weight: 35 g approx.
Straight connector for 9-pin connector side	**SD3-RS232**	Exclusive 9-pin connector. Straight type. For soldering. Net weight: 30 g approx.
Scanner window	**SD3-WINDOW**	Replacement lens for safety laser scanner body. Net weight: 45 g approx.

Straight connector for 15-pin connector side

- **SD3-PS**

Two M5 (length 20 mm 0.787 in) hexagon-socket-head bolts, two M5 (length 16 mm 0.630 in) hexagon-socket-head bolts, and two cylindrical nuts are attached.

Straight connector for 9-pin connector side

- **SD3-RS232**

Two cylindrical nuts are attached.

Scanner window

- **SD3-WINDOW**

OPTIONS

Designation		Model No.	Description	
Mounting bracket		**MS-SD3-1**	Used to mount the safety laser scanner in rear direction. Net weight: 530 g approx.	
15-pin connector side	Rear elbow connector	**SD3-PS-L**	Exclusive 15-pin connector. Rear elbow type. For soldering. Net weight: 35 g approx.	
	Configuration plug	**SD3-CP**	15-pin connector with built-in memory that saves setting information. For soldering. Net weight: 35 g approx.	
	Configuration plug attached cable	**SD3-CP-C5**	Cable length: 5 m 16.404 ft Net weight: 690 g approx. (1 cable)	Cable with configuration plug. Min. bending radius: R50 mm R1.969 in
		SD3-CP-C10	Cable length: 10 m 32.808 ft Net weight: 1.3 kg approx. (1 cable)	
		SD3-CP-C25	Cable length: 25 m 82.021 ft Net weight: 3.3 kg approx. (1 cable)	
		SD3-CP-C50	Cable length: 50 m 164.042 ft Net weight: 6.3 kg approx. (1 cable)	
		SD3-CP-C10-L	Cable length: 10 m 32.808 ft Elbow type Net weight: 1.3 kg approx. (1 cable)	
9-pin connector side	Rear elbow connector	**SD3-RS232-L**	Exclusive 9-pin connector used when PC is not connected. Rear elbow type. Cable soldering is possible. Net weight: 30 g approx.	
	PC connection cable	**SD3-RS232-C3**	Cable length: 3 m 9.843 ft Net weight: 160 g approx. (1 cable)	Exclusive 9-pin connector for RS-232C/422 with PC cable. Min. bending radius: R50 mm R1.969 in
		SD3-RS232-C5	Cable length: 5 m 16.404 ft Net weight: 230 g approx. (1 cable)	
		SD3-RS232-C10	Cable length: 10 m 32.808 ft Net weight: 400 g approx. (1 cable)	
Operation checking tool		**SD3-DEMO-24V**	Configuration and test device for safety laser scanner. Supply voltage: 24 V DC, Net weight: 270 g approx.	
Cleaning set		**SD3-CLEAN1**	Used to clean scanner window (lens surface). Cleaning fluid 150 mℓ, cleaning cloth 25 sheets.	
		SD3-CLEAN2	Used to clean scanner window (lens surface). Cleaning fluid 1 ℓ, cleaning cloth 100 sheets.	

Mounting bracket

• **MS-SD3-1**

Two M8 (length 45 mm 1.772 in) hexagon-socket-head bolts, two plain washers for M8, two M5 (length 20 mm 0.787 in) hexagon-socket-head bolts, two M5 (length 16 mm 0.630 in) hexagon-socket-head bolts, and four plain washers for M5 are attached.

Rear elbow connector

• **SD3-PS-L**

Two cylindrical nuts are attached.

Configuration plug

• **SD3-CP**

Two cylindrical nuts are attached.

Configuration plug attached cable

• **SD3-CP-C□** • **SD3-CP-C10-L**

Rear elbow connector

• **SD3-RS232-L**

Two cylindrical nuts are attached.

PC connection cable

• **SD3-RS232-C□**

Operation checking tool

• **SD3-DEMO-24V**

One exclusive connection cable is attached.

Cleaning set

• **SD3-CLEAN1** • **SD3-CLEAN2**

SPECIFICATIONS

Item		Type	Safety laser scanner				
		Model No.	**SD3-A1**				
Applicable standards		International standards	IEC 61496-1/3 (Type 3), ISO 13849-1 (Category 3, PLd), IEC 61508-1 to 7 (SIL2), IEC 62061 (SIL2)				
		Japan	JIS B 9704-1/3 (Type 3), JIS B 9705-1 (Category 3), JIS C 0508 (SIL2)				
		Europe (EU)	EN 61496-1 (Type 3), ISO 13849-1 (Category 3, PLd), EN 61508-1 to 7 (SIL2)				
Detection zone		Min. sensing object setting	ø150 mm ø5.906 in	ø70 mm ø2.756 in	ø50 mm ø1.969 in	ø40 mm ø1.575 in	ø30mm ø1.181 in
		Sensing range (radius)	0 to 4.0 m 0 to 13.123 ft	0 to 4.0 m 0 to 13.123 ft	0 to 2.8 m 0 to 9.186 ft	0 to 2.2 m 0 to 7.218 ft	0 to 1.6m 0 to 5.249 ft
		Measurement error margin extended range	When dust suppression function is not selected: 83mm 3.268 in When dust suppression function is selected: 83 mm 3.268 in for less than 3.5 mm 0.138 in, and 100 mm 3.937 in for 3.5 mm 0.138 in or more (automatically calculated using the included software)				
		Sensing object reflectance	Minimum 1.8 %				
Warning zone		Min. sensing object setting	ø150 mm ø5.906 in (fixed)				
		Sensing range (radius)	0 to 15 m 0 to 49.213 ft				
		Sensing object reflectance	Minimum 20 %				
Measurement zone		Max. measurement range (radius)	50 m 164.042 ft (fixed)				
Scanning angle			190° / 180° (by setting)				
Number of zone setting			Max. 7 + 1 (without detection zone) [Zone pairs in combination of detection zone and warning zone can be switched over by external input]				
Min. zone setting range			200 mm 7.874 in				
Supply voltage (U_B)			24 V DC$^{+20}_{-30}$ % (IEC 60742)				
Current consumption			300 mA approx. (excluding external connection load)				
Fuse (power supply)			1.25 A semi-time-lag fuse				
Control outputs (OSSD 1, OSSD 2)			PNP open-collector transistor 2 outputs • Rated operating voltage: supply voltage (U_B) − 3.2 V • Max. source current: 250 mA • Residual voltage: 3.2 V or less				
	Operation mode		When no object enters into the detection zone: ON, When an object enters: OFF				
	Response time		Min. 80 ms (2 scans) to max. 640 ms (16 scans) switching method				
	Protection circuit		Incorporated				
Warning output 1 (Alarm 1)			PNP open-collector transistor • Rated operating voltage: supply voltage (U_B) − 4 V • Max. source current: 100 mA • Residual voltage: 4 V or less				
	Operation mode		Switching method of operation mode (set by below) • Not used • Main unit at normal operation: ON, Abnormal operation: OFF • When no object enters into the warning zone: ON, When an object enters: OFF • Main unit at normal operation: ON, Abnormal operation: OFF and When no object enters into the warning zone: ON, When an object enters: OFF				
	Response time		Min. 80 ms (2 scans) to max. 640 ms (16 scans) switching method				
Warning output 2 (Alarm 2)			PNP open-collector transistor • Rated operating voltage: supply voltage (U_B) − 4 V • Max. source current: 100 mA • Residual voltage: 4 V or less				
	Operation mode		Main unit at normal operation: ON, Abnormal operation: OFF				
Laser protection class			Class 1 [IEC 60825, FDA (Note 2)]				
Peak emission wavelength			905 nm 0.036 mil				
Environmental resistance	Degree of protection		IP65				
	Ambient temperature		0 to +50 °C +32 to +122 °F, Storage: −20 to +60 °C −4 to +140 °F				
	Ambient humidity		Operation and storage: Max. 95 % RH (No dew condensation)				
	Vibration resistance / Shock resistance		10 to 150 Hz frequency, 5 G max. (50 m/s^2 approx.) in X, Y and Z directions for twenty times each				
Maximum cable length			15-pin plug: Max. 50 m 164.042 ft, 9-pin plug: Max. 10 m 32.808 ft (when using RS-232C) / Max. 50 m 164.042 ft (when using RS-422) (by using optional connection cable) (Note 1)				
Material			Main body: Die-cast aluminum, Scanner window: Thermoplastic resin				
Accessories			**SD3-PS** (exclusive 15-pin connector): 1 pc., **SD3-RS232** (exclusive 9-pin connector): 1 pc., Mounting screws [M5 (length 20 mm 0.787 in) hexagon-socket-head bolt: 2 pcs., M5 (length 16 mm 0.630 in) hexagon-socket-head bolt: 2 pcs., attached to **SD3-PS**]: 1 set, Simplified instruction manual: 1 copy, Installation CD-ROM (includes detailed instruction manual data): 1 CD				
Weight			Net weight: 2.1 kg approx., Gross weight: 2.9 kg approx.				

Notes: 1) Be careful that a voltage drop may occur depending on the cable length or cable's conductor cross-section area.
2) In accordance Laser Warning 50 (2007.6.24), based on FDA regulations (21 CFR 1040.10, 1040.11).

I/O CIRCUIT AND WIRING DIAGRAMS

Connection wiring example with control unit SF-C13

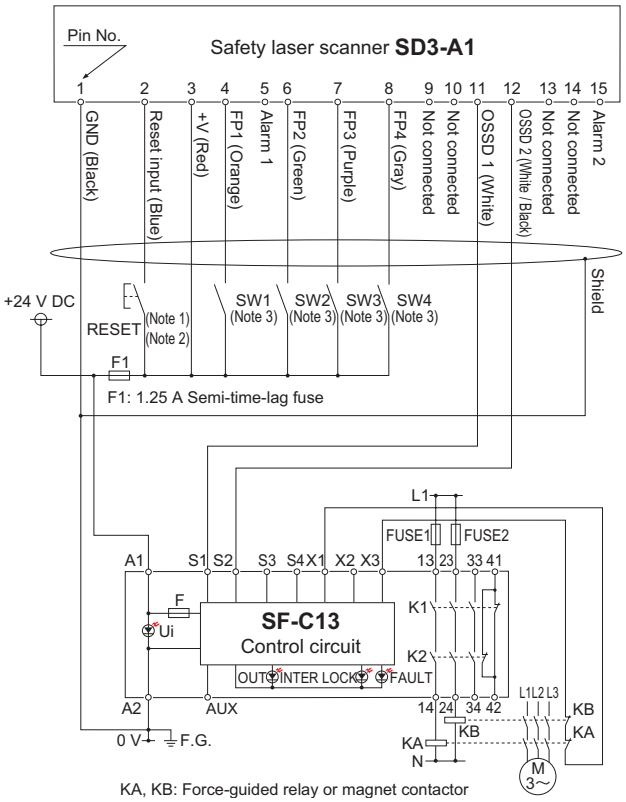

Notes: 1) The above diagram is when using manual reset. If automatic reset is used, a reset (RESET) button is not needed. Settings by software are needed separately.
2) Use a momentary-type switch as the reset (RESET) button.
3) For zone-control inputs (SW1 to 4), use PLC etc. (input time should be 40 ms or less).

Zone No.	Control inputs			
	FP1	FP2	FP3	FP4
1	1	0	0	0
2	0	1	0	0
3	0	0	1	0
4	0	0	0	1
5	1	1	1	0
6	1	1	0	1
7	1	0	1	1
8	0	1	1	1

PRECAUTIONS FOR PROPER USE

Refer to General precautions and About laser beam.

Wiring

- Make sure that the power supply is off while wiring.
- Do not run the wires together with high-voltage lines or power lines or put them in the same raceway. This can cause malfunction due to induction.
- Faulty wiring can damage internal circuitry so check the wiring before turning the power on.

Others

- Avoid using the device in places that are humid and dusty, places where water and medicine are stored, or where there are corrosive gases in the air.
- Take care that the sensor does not come in direct contact with water, oil, grease or organic solvents, such as, thinner, etc.

DIMENSIONS (Unit: mm in)

The CAD data in the dimensions can be downloaded from our website.

SD3-A1 — Safety laser scanner

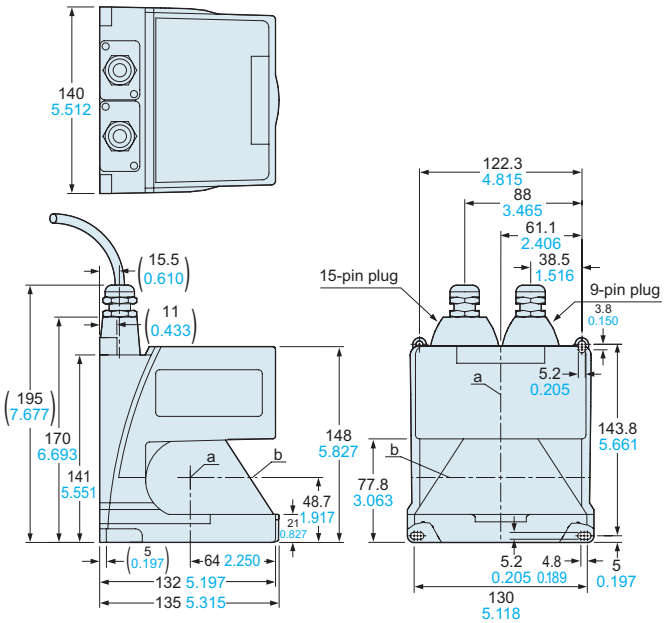

a: Rotating mirror axis
b: Scan level (beam axis)

MS-SD3-1 — Mounting bracket (Optional)

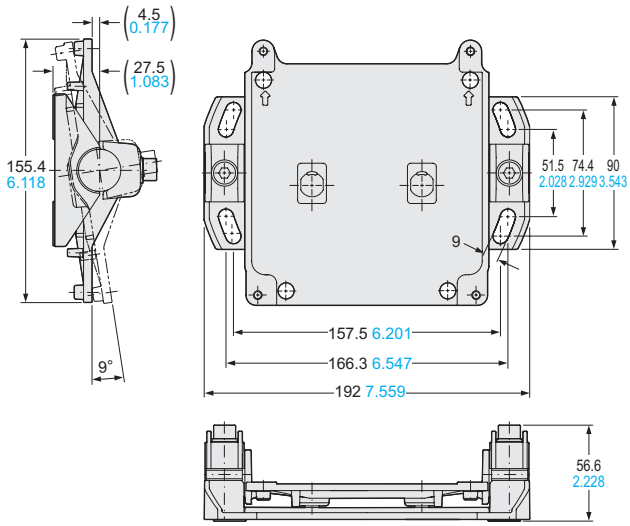

Material: Aluminum
Net weight: 530 g approx.

Two M8 (length 45 mm 1.772 in) hexagon-socket-head bolts,
two plain washers for M8,
two M5 (length 20 mm 0.787 in) hexagon-socket-head bolts,
two M5 (length 16 mm 0.630 in) hexagon-socket-head bolts,
and four plain washers for M5 are attached.